NV-01

Needle valve

Description:

Profimess' needle valves are intended for precise regulation of the quantity of fluids flowing through pipes. The devices body is constructed in two parts. The upper part is screwed into the body. Designs available in brass, steel and stainless steel in nominal diameters of IG 1/8" to IG 2" allow a wide range of applications which is why these devices are used in the entire industry.

Features

/ Brass, steel or stainless steel

/ Usable up to 550°C

/ Up to PN 400

/ Compact Design

Application:

Profimess' needle valves are deployed wherever flowing fluids in industrial installations need to be shut off, reduced or regulated. The stainless steel version of the valves can be deployed up to 400 bar and 350°C, whereby the dependence of maximum pressure and the operating temperature must be taken into consideration. Higher temperatures, up to 550°C are available on request. They are particularly suitable to be used as shut-off devices in measuring operations in level and flow control.

Technical Specifications:

max. Pressure /	100 to 400 bar, see table
Pressure reduction /	
Temperature:	50°C 100°C 200°C 300°C 400°C
Reduction:	6% 15% 37% 60% 84%
max. Media-temp. /	NV-01.1: -20°C to +100°C NV-01.2: -20°C to +350°C NV-01.3: -20°C to +250°C **up to 550°C on request**
Material NV-01.1 /	
Housing:	brass
Headpiece:	brass
Spindle:	brass
Gland base ring:	brass
Spindle sealing:	PTFE
Gland nut:	brass
Material NV-01.2 /	
Housing:	steel
Headpiece:	steel
Spindle:	1.4104
Gland base ring:	1.4104
Spindle sealing:	graphite
Gland nut:	steel
Material NV-01.3 /	
Housing:	1.4571
Headpiece:	1.4571
Spindle:	1.4571
Gland base ring:	1.4571
Spindle sealing:	PTFE
Gland nut:	1.4571

Dimensions in mm:

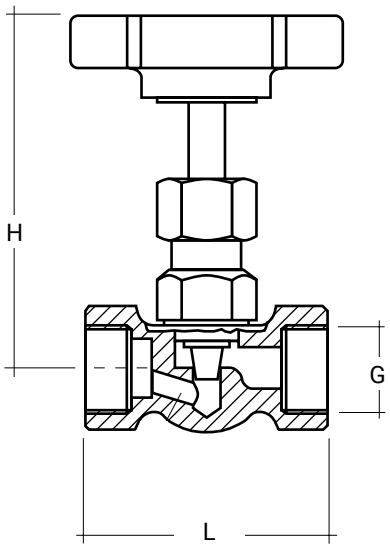

NV-01.1									
G	1/8"	¼"	3/8"	½"	¾"	1"	1 ¼"	1 ½"	2"
L	50	50	50	50	67	75	110	110	112
H	78	78	78	78	90	90	110	110	120
Kv in m^3/h	0,24	0,48	0,6	0,66	1,08	1,62	3,0	3,6	3,6
PN	100	100	100	100	100	100	100	100	100

NV-01.2 and NV-01.3									
G	1/8"	¼"	3/8"	½"	¾"	1	1 ¼"	1 ½"	2"
L	45	55	55	60	75	100	110	130	130
H	72	75	72	77	99	110	145	145	145
Kv in m^3/h	0,24	0,48	0,6	0,74	1,35	1,66	3,10	5,56	5,56
PN	400	400	400	400	200	200	160	120	120

Ordering Codes:

Order number | **NV-01.** | **1.** | **3**

NV-01 Needle Valve

Material /
1 = brass
2 = steel
3 = stainless steel

Process Connection /
1 = IG 1/8"
2 = IG ¼"
3 = IG 3/8"
4 = IG ½"
5 = IG ¾"
6 = IG 1"
7 = IG 1 ¼"
8 = IG 1 ½"
9 = IG 2"

address Schleusenstraße 3 | D-27568 Bremerhaven | Germany | **tel** +49 (0)471 98 24 151
fax +49 (0)471 98 24 152 | **mail** info@profimess.de | **web** profimess.com