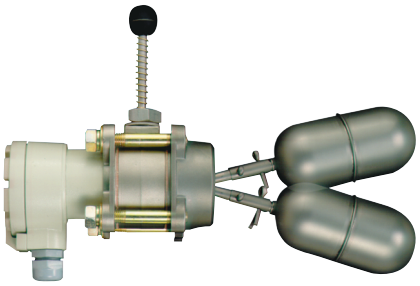

FS-04

Float Switch for Horizontal or Vertical Mounting

Features

/ Suitable in ship-building

/ Cost-effective

/ Robust

/ Square flange or thread connection

/ DN80 to DN150 flange

/ Fixed and adjustable hysteresis

/ Explosion proof version

/ SIL 1

Description:

A float spatially completely separated from the outer side of the vessel moves up and down along with the fluid being monitored. This movement is transmitted by means of a permanent magnet at the end of the float to a change-over contact mounted in an aluminium switch housing which triggers a switching operation when the float reaches the center position. The float can be provided with a rod extension so as to generate different switching hystereses and switching points. The switch housing can be supplied with protection type IP68 so that also applications under water (up to 20 m water column) can be included. Optionally, PROFIMESS GMBH supplies a prefabricated proven counter-flange that is compatible with the standard connection of the FS-04 with square flange and test actuators for a „dry“ simulation of the switching operation.

Application:

The FS-04 series of magnetic float switches is used for limit value switching in fluids. The switches are passive components and operate without any auxiliary power source. Thanks to the wide range of operating temperatures and pressure, including various mounting positions on top, on the side, under water or in potentially explosive areas as well as media-contacted components in stainless steel, the switches can be deployed in many ways. In ship-building, particularly, the FS-04 has gained a significant position since it has an extremely robust design and can be used for operation under the harsh conditions on board without a problem in contrast to many other types of switches.

Technical Specifications:

max. Pressure /	PN25
Weight /	1.8. . .3.5 kg
Wet components /	stainless steel (rubber or silicone for version with protective rubber bag)
Housing material /	Aluminium casting, paint coated
Ambient temp. /	-20. . .+80°C submersible ver. -20. . .+60°C
Media temperature /	standard version: -20. . .+250°C, protective rubber bag: -20. . .+100°C, prot. silicone rubber bag: -20. . .+200°C, submersible version: -20. . .+80°C
Media density /	0.7 g/ccm without extension 0.8 g/ccm to 300 mm extension for float diameter 64 mm 0.85 g/ccm to 300 mm extension for float diameter 52 mm
Certificates /	Atex, Germanischer Lloyd, SIL 1
Option /	Test actuator: with the test actuator the functioning of FS-04 can be checked without dismantling the switch and without changing the level. The test actuator is available as simple steel or stainless steel version.
Counter-flange /	92 mm square counter-flange can be supplied in steel or stainless steel versions which are prepared for direct welding on to the vessel. They can be provided with extended spacer bolts for using a test actuator.
Explosion protection /	The switch housing is available in pressure-compression encapsulation, in which case the protection against ignition is EEx dme IIC T2. . .T6.

Temperature diagramm:

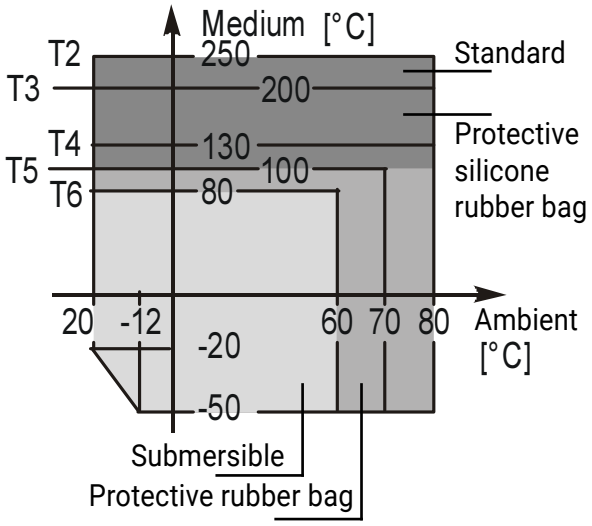

Float Table:

	Rod length in mm			
Float Ø in mm	**0, 100**	**200**	**300**	**1000-3000**
52	0.7	0.8	0.85	-
64	0.7	0.8	0.8	-
124	-	-	-	0.7

address Schleusenstraße 3 | D-27568 Bremerhaven | Germany | **tel** +49 (0)471 98 24 151
fax +49 (0)471 98 24 152 | **mail** info@profimess.de | **web** profimess.com

Electrical Specifications:

Switching element /	1 micro-switch with two switching contacts (NO and NC)
Switching load norm. /	250V AC12 10A, 220V DC13 0.6A
Switching load Ex /	250V AC12 2.5A, 220V DC13 0.3A
El. connection /	M20 x 1.5, in under water version molded cable with a cross-section of 5 x 1,5 mm² (please specify cable length while ordering)
Protection class /	IP 65 except for the under water version IP 68 to 20 meter water column

Electrical Connection:

Standard-Version:

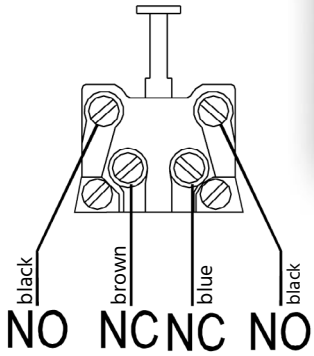

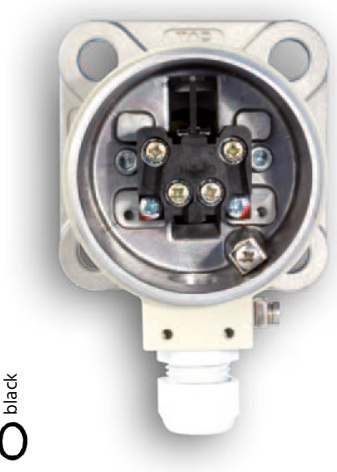

Submersible version:

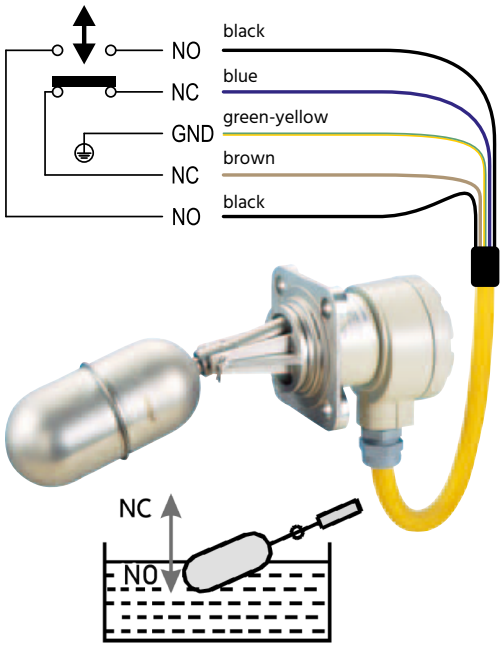

Ordering Codes:

Order number	FS-04.	1.	A.	1.	1.	1.	0

FS-04 Float Switch

Mounting position /
1 = horizontal
2 = vertical

Version /
A = standard
G = standard with protective rubber bag
S = standard with protective silicon rubber bag
U = under water (only with cable IP 68)*
V = under water with protective rubber bag
Z = under water with protective silicon rubber bag

Hysteresis /
1 = fixed hysteresis
2 = adjustable hysteresis (horizontal mounting pos. only, not with protective bag)

Process connection /
1 = 92 square flange PN 25
2 = DN 80 PN 25 steel
3 = DN 100 PN 25 steel
3a = DN 125 PN 25 steel
3b = DN 150 PN 25 steel
4 = DN 80 PN 25 stainless steel 1.4571
5 = DN 100 PN 25 stainless steel 1.4571
5a = DN 125 PN 25 stainless steel 1.4571
5b = DN 150 PN 25 stainless steel 1.4571
B = 2" BSP thread (horiz. mounting position and fixed hysteresis only)
N = 2" NPT thread (horiz. mounting position and fixed hysteresis only)

Rod length in [mm] /
1 = 0 mm
2 = 100 mm
3 = 200 mm
4 = 300 mm
5 = Z-shaped (not for adjustable hysteresis)
6 = L-shaped (not for adjustable hysteresis)

Counter flange /
0 = none
1 = with steel flange without test device
2 = with steel flange for test device
3 = with steel flange incl. test device
7 = with st. steel flange without test device
8 = with st. steel flange for test device
9 = with st. steel flange incl. test device

* please specify the desired cable length while ordering!

Dimensions in mm:

FS-04.1.A.1.B

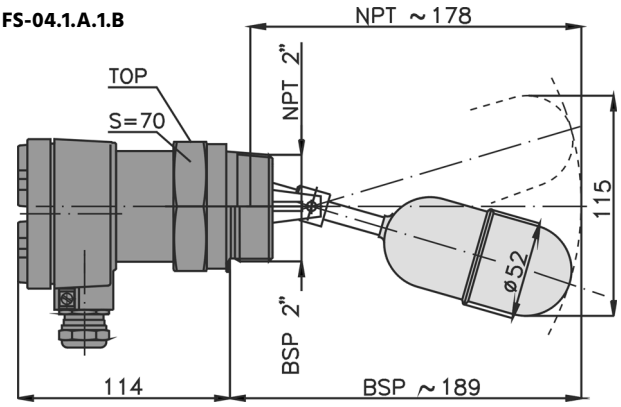

Counter flange with test device:

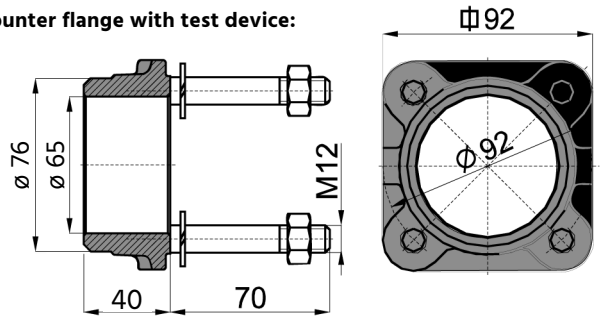

Counter flange without test device:

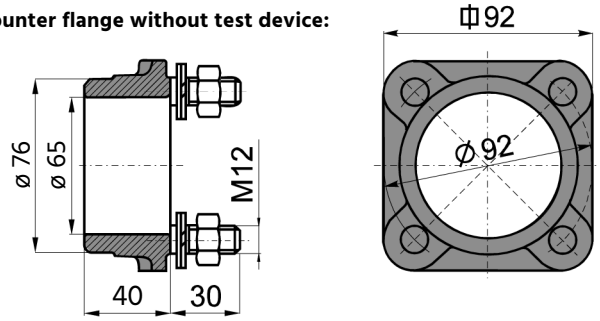

FS-04.1.A.1.2

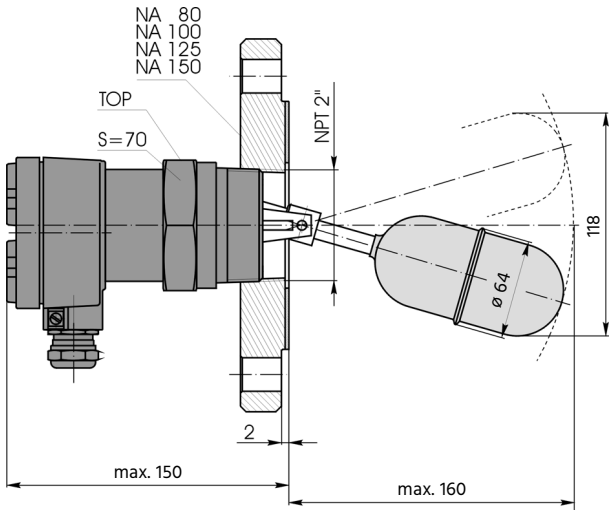

Test device:

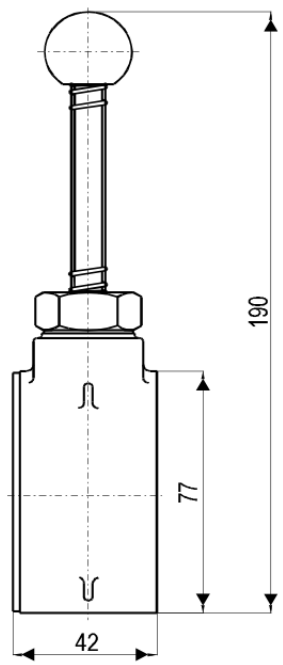

FS-04.1.G.1.1.1

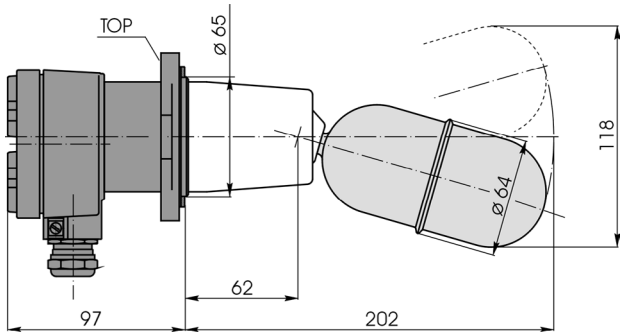

address Schleusenstraße 3 | D-27568 Bremerhaven | Germany | **tel** +49 (0)471 98 24 151
fax +49 (0)471 98 24 152 | **mail** info@profimess.de | **web** profimess.com

FS-04.2.A.1.1.6

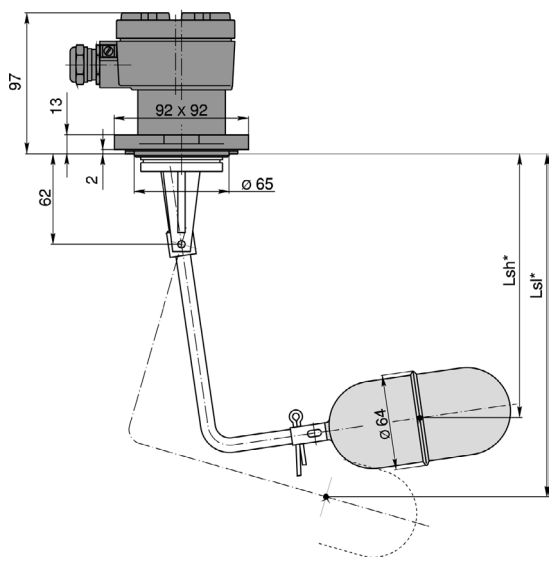

FS-04.1.A.1.1.5

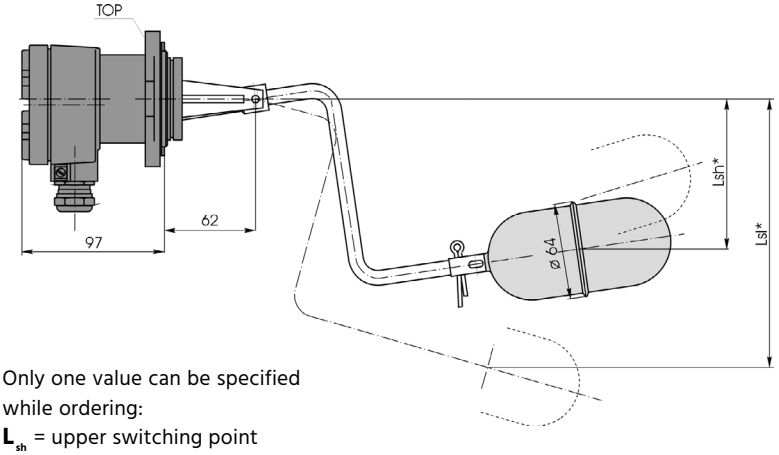

Only one value can be specified while ordering:
L_{sh} = upper switching point
L_{sl} = lower switching point

FS-04.1.A.2.1.x

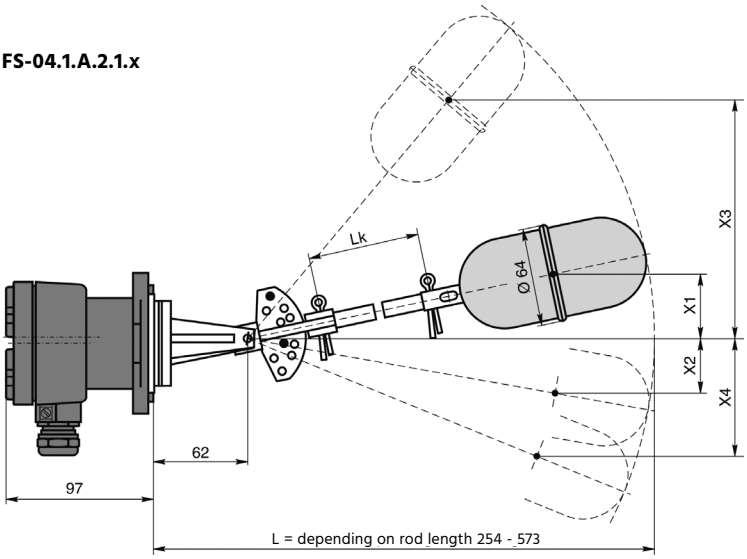

FS-04.x.x.2.x.x Data refers to water 20°C; Tolerance: +/- 5mm				
Lk = rod length [mm]	0	100	200	300
L = mounting length [mm]	254	373	473	573
x1 = min. upper switching dist. [mm]	28	55	78	100
x2 = min. lower switching dist. [mm]	28	55	78	100
x3 = max. upper switching dist. [mm]	100	193	270	350
x4 = max. lower switching dist. [mm]	100	193	270	350

FS-04.1.A.1.1.x

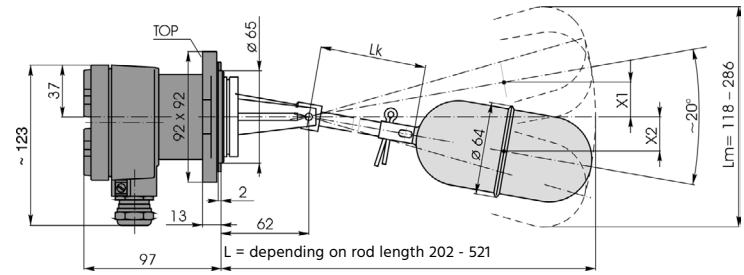

FS-04.x.x.1.x.x Data refers to water 20°C; Tolerance: +/- 5mm				
Lk = rod length [mm]	0	100	200	300
L = mounting length [mm]	202	321	421	521
Lm= total deflection [mm]	118	180	234	286
x1 = switching point top [mm]	12	30	46	62
x2 = switching point bottom [mm]	12	30	46	62

address Schleusenstraße 3 | D-27568 Bremerhaven | Germany | **tel** +49 (0)471 98 24 151
fax +49 (0)471 98 24 152 | **mail** info@profimess.de | **web** profimess.com