PT-02

Insertion Resistance Thermometer

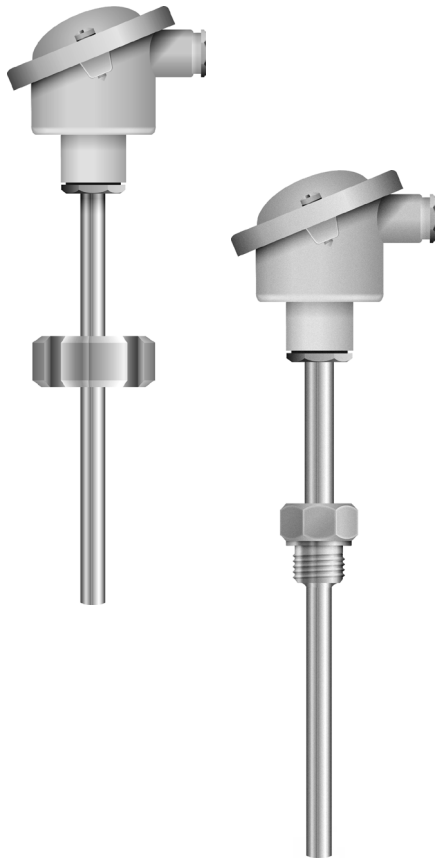

Features

/ All types of designs

/ Integrated transmitter

/ Current or resistance output

/ Stainless steel

/ -50. . .+550°C

/ Insertible into process- or protection tube

/ Special type connections

Description:

A temperature-dependent electrical Pt100 resistance is situated in a protective stainless steel tube as specified by the customer. It changes its ohmic resistance value proportionally to the temperature of the media and the same is tapped at the connecting head of the PT-02 in 2-, 3- or 4-wire system. This ensures compensation of measuring errors through the electrical feeder lines. If the device has an integrated head transmitter, it generates a 4. . .20 mA current signal, proportional to the temperature, directly from the tapped resistance value as per the proven 2-wire system. The transmitter can also be supplied as ex-version with intrinsically safe operation so that the head of the device can be used in Zone 1.

Application:

The PT-02 series of insertion resistance thermometers is manufactured as per the customer specifications with regard to process connection, shaft length and shaft diameter. They are ideally suited for use in protective tubes (in high pressure applications or hostile media) as well as for direct insertion into the process. The wide range temperatures from -50. . .+550°C contributes to the fact that these sensors are used nearly in the entire industry with great success. The thermometers for temperatures +120°C and up are provided with an additional neck tube that serves as a cooling line and protects the connecting head against overheating. In order to ensure maximum accuracy, only carefully tested measuring elements as per DIN are used, thus allowing the customer to select from Classes A and B.

Versions:

PT-02 Insertion Resistance Thermometer

Neck tube: From a temperature of +120°C upwards using a neck tube is recommendable which serves as a cooling line.

Process Connection: The process connection can be designed as male thread or swivel nut. For pharmaceutical or food-processing industries aseptic glands or clamp connections are available. Chemical and petro-chemical industries can be supplied with any type of flange connection.

Measuring element: The user can select from among elements of Classes A (± (0.15 + 0.002*t) °C) and B (± (0.3 + 0.005*t) °C).

Output: Depending on the further processing of the signal, the Pt 100 can be designed as 2-, 3- or 4-wire system. Also available is a version with two PT 100 measuring elements in one shaft. In this case the Pt100's must be connected as 2- or 3-wire. For integrated head transmitter a 4. . .20 mA 2-wire signal is generated.

Insertion length: Customer can specify the inserting length from the sealing surface.

Connecting head: 6 different connecting heads as per DIN are available. Please refer to "Drawing for connecting heads". In versions with integrated head measuring transmitter the head Form B is used as a standard.

Technical Specifications:

Pressure /	max. 6 bar for protective stainless tube (mounting in high-pressure protective tubes possible)
Temperature /	max. +70°C at head transmitter
Neck tube /	from media temperature +120°C upwards the standard is a 120 mm neck tube (customized manufacturing possible)
Temperature range /	-50. . .+550°C
Material /	shaft, neck tube and thread in stainless steel 1.4571
Accuracy /	Pt100 Class A or B as per DIN IEC 751
Electrical connection /	ceramic clamping block in connecting head
Process connection /	welded or screwed in bushing, protective tube, compression fitting

Electrical Specifications:

Supply voltage /	24 VDC (for head transmitter)
Output /	1 x Pt100 2-wire,1 x Pt100 3-wire, 1 x Pt100 4-wire, 2 x Pt100 2-wire, 2 x Pt100 2-wire or 4 to 20 mA 2-wire
Protection class /	IP54 EN 60529

address Schleusenstraße 3 | D-27568 Bremerhaven | Germany | **tel** +49 (0)471 98 24 151
fax +49 (0)471 98 24 152 | **mail** info@profimess.de | **web** profimess.com

Ordering Codes:

Order number	PT-02.	1.	2.	1.	1.	▯▯▯▯.	3.	2.	▯▯▯▯.	▯▯▯▯

PT-02 Insertion Resistance Thermometers

Neck tube /
1 = no neck tube (up to +120°C)
2 = with neck tube (from +120°C upwards)

Process connection /
1 = smooth shaft
2 = G 1/2"-male
3 = G 1/2" swivel nut
4 = G 3/4"-male
5 = G 3/4" swivel nut
6 = G 1"-male
7 = G 1" swivel nut
8 = NPT 1/2"-male
9 = NPT 3/4"-male
10 = M 18 x 1.5-male
11 = M 18 x 1.5 swivel nut
12 = M 20 x 1.5-male
13 = M 20 x 1.5 swivel nut
14 = M 27 x 2-male
15 = M 27 x 2 swivel nut
16 = clamp 1"
17 = clamp 2"
18 = special connection (flange or aseptic gland) in detailed text

Measuring element:
1 = 1 x Pt100, Class A as per DIN EC 751
2 = 1 x Pt100, Class B as per DIN EC 751
3 = 2 x Pt100, Class A as per DIN EC 751 (2- or 3-wire only)
4 = 2 x Pt100, Class B as per DIN EC 751 (2- or 3-wire only)

Output:
0 = 2-wire
1 = 3-wire
2 = 4-wire
3 = 4 to 20 mA with head transmitter

Insertion length:
▯▯▯▯ shaft length from sealing surface in mm

Shaft diameter:
1 = 3 mm (for mounting in protection tube)
2 = 6 mm
3 = 8 mm
4 = 15 mm

Connecting head /
1 = form A
2 = form B (standard for head transmitter)
3 = form BUZ (DAN)
4 = form BUZ-H (DANW)
6 = form BEG
7 = form GG

Temperature range /
▯▯▯▯ initial value

Temperature range /
▯▯▯▯ end value

Dimensions in mm:

Form A – cover with 2 fastening screws
Material: aluminium pressure casting

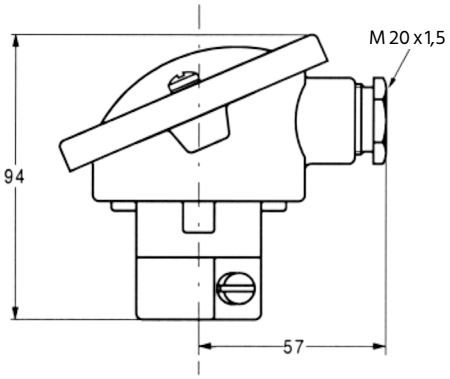

Form B – over with 2 fastening screws
Material: aluminium pressure casting

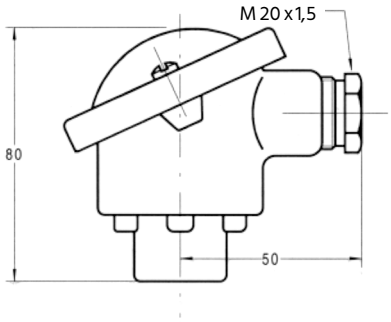

Form BUZ (DAN) – flap cover with bracket
Material: aluminium pressure castin

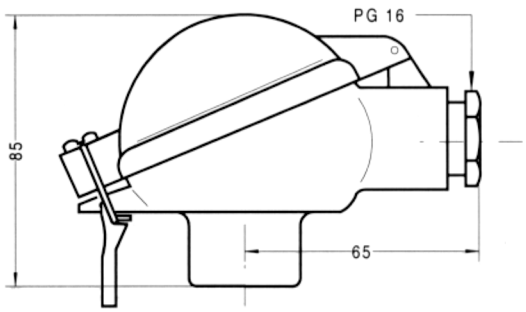

Form BUZ-H (DANW) – high flap cover with bracket

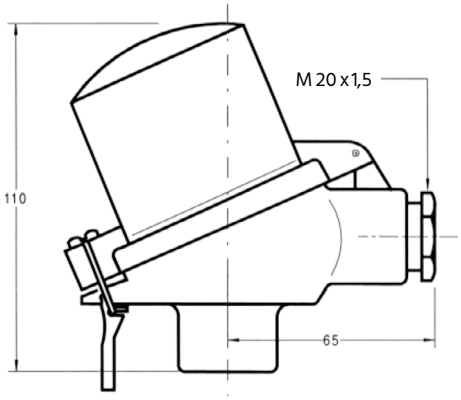

Form BEG – screw cap with chain
Material: stainless steel 1.4571

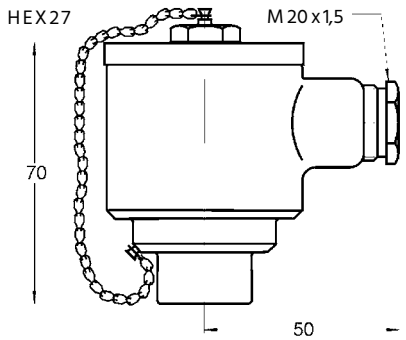

Form GG – cover with screw closure
Material: steel/cast iron

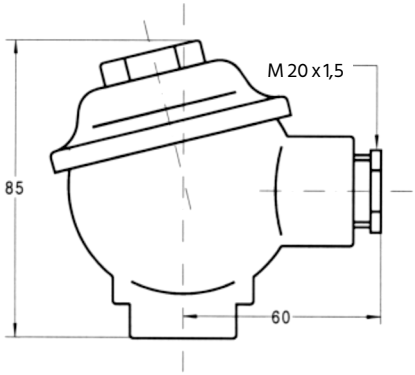

address Schleusenstraße 3 | D-27568 Bremerhaven | Germany | **tel** +49 (0)471 98 24 151
fax +49 (0)471 98 24 152 | **mail** info@profimess.de | **web** profimess.com