PS-00

Low-Cost Pressure Switch

Features

/ Settings can be made on location

/ Long mechanical life span

/ Small dimensions

/ Silver or gold contacts

/ Critical media version (paint, grease etc.) on request

Description:

A spring-loaded membrane or (in higher ranges of pressure) a spring-loaded piston form the measurement technical basis for the Profimess' Low-Cost Pressure switch PS-00. Under the influence of pressure the operating element actuates an electrical micro-switch that is equipped with silver contacts and thus ensures a long life span. By means of a setting screw the pre-tension for the spring can be smoothly adjusted, with the result that the setpoint can be varied along entire range of setting.

Application:

Mechanical pressure switches are used in all areas where an electrical signal is required depending on the specified pressure parameters. These devices are predestined - thanks to small dimensions, high reliability and long life span – especially for applications in the construction of machines and installations. Due to excellent price to performance ratio, the PS-00 range of pressure switches are suited for OEM applications as well regardless of average to high numbers.

Technical Specifications:

Operating range / see ordering codes

Mode of setting / by setting screw, under pressure

Switch. hysteresis / 15. . .30% of set point value

Tolerance /
PS-00.1.: ± 0.2 bar
PS-00.2.: ± 0.5 bar
PS-00.3.: ± 3.0 bar
PS-00.4.: ± 5.0 bar
PS-00.5.: ± 100 mbar

max. Op. pressure / 1 x end of range

Bursting pressure /
PS-00.1.: 10 bar
PS-00.2.: 20 bar
PS-00.3.: 120 bar
PS-00.4.: 300 bar
PS-00.5.: 2 bar

Mech. Lifetime / 10^6 switching cycles

max. Media temp. / -25. . .+85°C

Housing / see Table 1

Process connection / G1/4"B for overpressure ranges, G1/8"B for neg. pressure ranges

Weight /
PS-00.1-2.: approx. 65 g
PS-00.3-4.: approx. 95 g
PS-00.5.: approx. 120 g

Configuration Possibilities:

Auswahlmöglichkeit	PS-00.1	PS-00.2	PS-00.3	PS-00.4	PS-00.5
Contact silver	standard	standard	standard	standard	standard
Contact gold	option	option	option	option	option
Membrane material NBR	standard	standard	-	-	standard
Membrane materiall Viton	option	option	-	-	option
Membrane material EPDM	option	option	-	-	option
Seal material UR	-	-	standard	standard	-
Seal material Viton	-	-	option	option	-
Housing steel zinc plated	standard	standard	standard	standard	-
Housing st. steel 1.4305	option	option	option	option	-
Housing st. steel 1.4571	option	option	-	-	-
Housing material brass	option	option	-	-	standard

Ordering Codes:

Order number PS-00. 2. 2. 1. 3. 1

PS-00 Low-Cost Pressure Switch

Operating ranges /
1 = 0.5. . .2 bar
2 = 1. . .10 bar
3 = 10. . .70 bar
4 = 50. . .200 bar
5 = -800. . .-200 mbar

Contact /
1 = silver
2 = gold

Membrane material /
(ranges 1, 2 and 5 - refer to table 1)
1 = NBR
2 = Viton
3 = EPDM

Seal material /
(ranges 3 and 4 - refer to table 1)
4 = UR
6 = Viton

Housing /
(all ranges - refer to table 1)
1 = steel zinc plated
2 = stainless steel 1.4305
3 = stainless steel 1.4571
4 = brass

Protective cover /
0 = none
1 = NBR 55° Sh for Operating ranges 1-4
2 = NBR 55° Sh for Operating ranges 5

Electrical Specifications:

Reference voltage / max. 42 V

Reference frequenzy / not over 100 Hz

Switching load / max. 100 VA

Switching function / change-over (NO-contact or NC-contact on request)

Connection / flat plug 3 x 6.3 x 0.8

Protection class / IP65 on media side
IP00 on clamp side

Breaking capacity	AC		DC				
Voltage up to	125 V	250 V	30 V	50 V	75 V	125 V	250 V
Resistance load	4 A	4 A	2 A	2 A	1 A	0,5 A	0,25 A
Inductive load	1 A	1 A	1 A	1 A	0,5 A	0,2 A	0,2 A

address Schleusenstraße 3 | D-27568 Bremerhaven | Germany | **tel** +49 (0)471 98 24 151
fax +49 (0)471 98 24 152 | **mail** info@profimess.de | **web** profimess.com

Dimensions in mm:

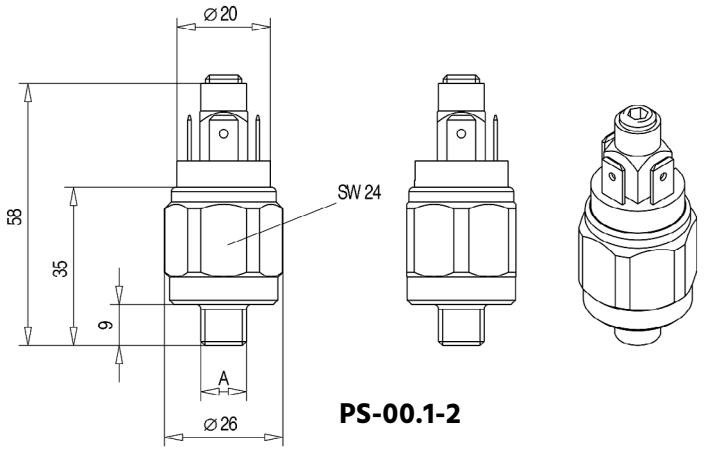

PS-00.1-2

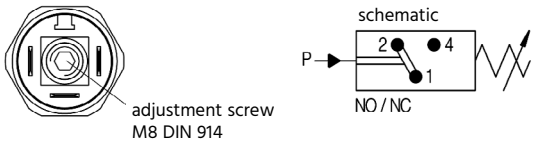

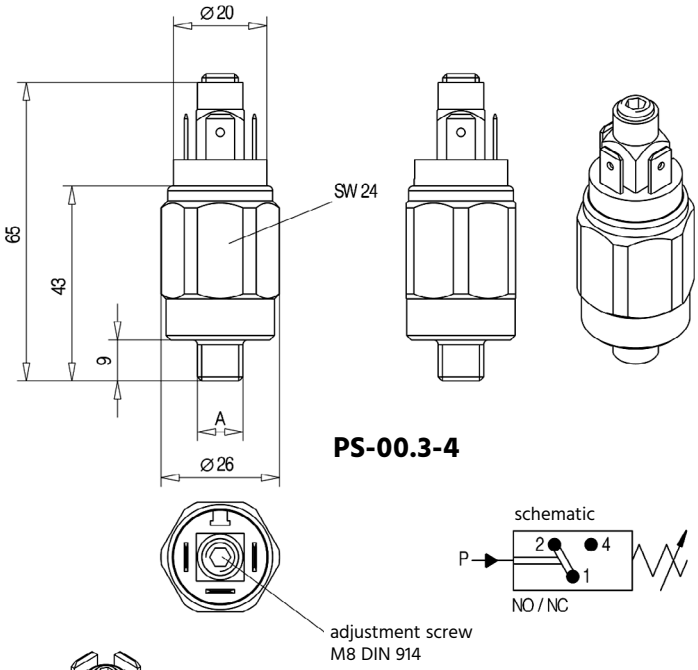

PS-00.3-4

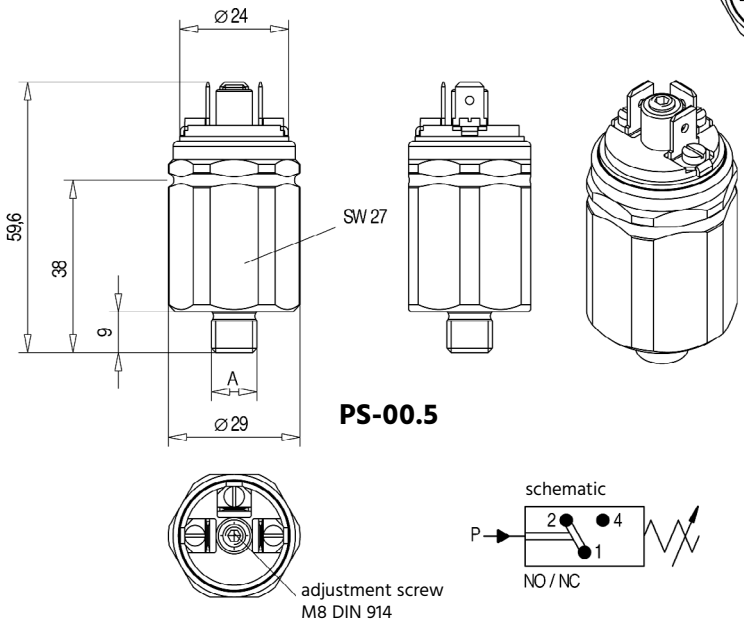

PS-00.5

address Schleusenstraße 3 | D-27568 Bremerhaven | Germany | **tel** +49 (0)471 98 24 151
fax +49 (0)471 98 24 152 | **mail** info@profimess.de | **web** profimess.com